REVISIONS				
ZONE	REV.	DESCRIPTION	DATE	APPROVED

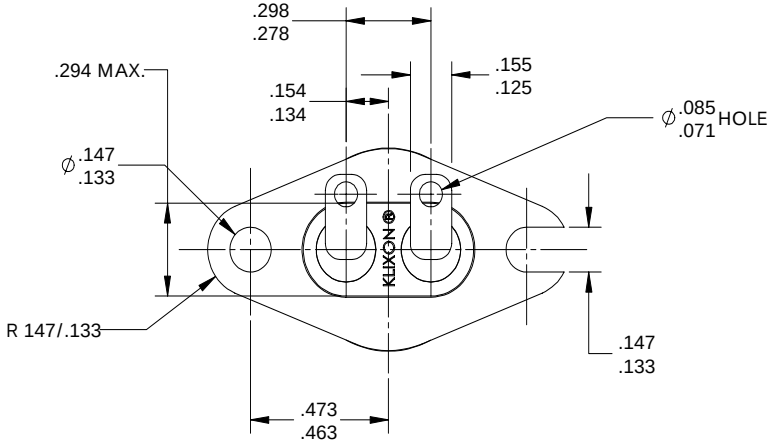

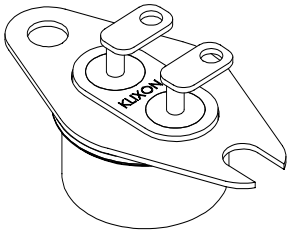

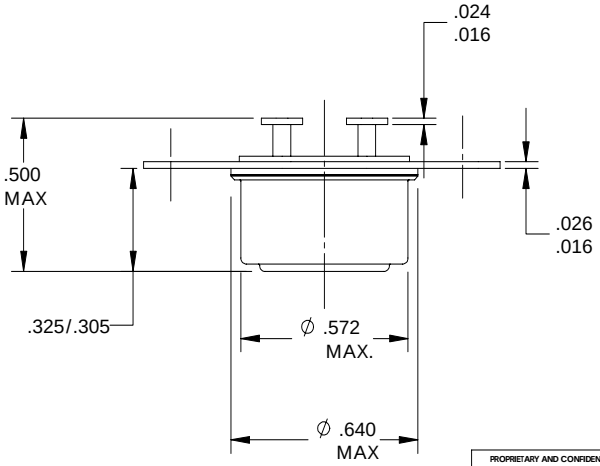

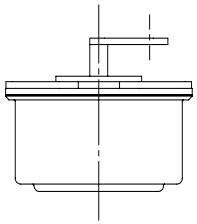

NEITHER THIS PRINT NOR THE INFORMATION CONTAINED THEREON IS TO BE USED AGAINST THE INTEREST OF TEXAS INSTRUMENTS, INC. OR AGAINST THE INTERESTS OF ANY OF ITS AFFILIATED COMPANIES OR WHOLLY OWNED SUBSIDIARIES.

FOR REFERENCE ONLY
CONSULT TEXAS INSTRUMENTS
CUSTOMER SERVICE FOR LATEST
REVISION BEFORE USE

PROPRIETARY AND CONFIDENTIAL

THE INFORMATION CONTAINED IN THIS DRAWING IS THE SOLE PROPERTY OF TEXAS INSTRUMENTS, INC. ANY REPRODUCTION IN PART OR AS A WHOLE WITHOUT THE WRITTEN PERMISSION OF TEXAS INSTRUMENTS, INC. IS PROHIBITED.

NEXT ASSY	USED ON
APPLICATION	

UNLESS OTHERWISE SPECIFIED:
DIMENSIONS ARE IN INCHES
TOLERANCES:
FRACTIONAL ±
ANGULAR: MACH ± BEND ±
TWO PLACE DECIMAL ±
THREE PLACE DECIMAL ±

INTERPRET GEOMETRIC TOLERANCING PER:

MATERIAL --

FINISH --

	DATE	NAME
DRAWN		
CHECKED		
ENG APPR.		
MFG APPR.		
Q.A.		

COMMENTS:

TEXAS INSTRUMENTS, INC.

TITLE:

THERMOSTAT SWITCH
ENVELOPE DRAWING

SIZE	DWG. NO.	REV
B	11041-14 STYLE	

SCALE: 4:1 | WEIGHT: | SHEET 1 OF 1